Cambridge Assessment International Education

Cambridge International AS & A Level

PHYSICS **9702/13**

Paper 1 Multiple Choice **October/November 2020**

1 hour 15 minutes

You must answer on the multiple choice answer sheet.

You will need: Multiple choice answer sheet
Soft clean eraser
Soft pencil (type B or HB is recommended)

INSTRUCTIONS

- There are **forty** questions on this paper. Answer **all** questions.
- For each question there are four possible answers **A**, **B**, **C** and **D**. Choose the **one** you consider correct and record your choice in soft pencil on the multiple choice answer sheet.
- Follow the instructions on the multiple choice answer sheet.
- Write in soft pencil.
- Write your name, centre number and candidate number on the multiple choice answer sheet in the spaces provided unless this has been done for you.
- Do **not** use correction fluid.
- Do **not** write on any bar codes.
- You may use a calculator.

INFORMATION

- The total mark for this paper is 40.
- Each correct answer will score one mark. A mark will not be deducted for a wrong answer.
- Any rough working should be done on this question paper.

This document has **20** pages. Blank pages are indicated.

© UCLES 2020

Data

speed of light in free space	$c = 3.00 \times 10^{8}\,\text{m s}^{-1}$
permeability of free space	$\mu_0 = 4\pi \times 10^{-7}\,\text{H m}^{-1}$
permittivity of free space	$\varepsilon_0 = 8.85 \times 10^{-12}\,\text{F m}^{-1}$
	$(\frac{1}{4\pi\varepsilon_0} = 8.99 \times 10^{9}\,\text{m F}^{-1})$
elementary charge	$e = 1.60 \times 10^{-19}\,\text{C}$
the Planck constant	$h = 6.63 \times 10^{-34}\,\text{J s}$
unified atomic mass unit	$1\,\text{u} = 1.66 \times 10^{-27}\,\text{kg}$
rest mass of electron	$m_\text{e} = 9.11 \times 10^{-31}\,\text{kg}$
rest mass of proton	$m_\text{p} = 1.67 \times 10^{-27}\,\text{kg}$
molar gas constant	$R = 8.31\,\text{J K}^{-1}\,\text{mol}^{-1}$
the Avogadro constant	$N_\text{A} = 6.02 \times 10^{23}\,\text{mol}^{-1}$
the Boltzmann constant	$k = 1.38 \times 10^{-23}\,\text{J K}^{-1}$
gravitational constant	$G = 6.67 \times 10^{-11}\,\text{N m}^2\,\text{kg}^{-2}$
acceleration of free fall	$g = 9.81\,\text{m s}^{-2}$

© UCLES 2020

Formulae

uniformly accelerated motion	$s = ut + \frac{1}{2}at^2$ $v^2 = u^2 + 2as$
work done on/by a gas	$W = p\Delta V$
gravitational potential	$\phi = -\frac{Gm}{r}$
hydrostatic pressure	$p = \rho gh$
pressure of an ideal gas	$p = \frac{1}{3}\frac{Nm}{V}\langle c^2 \rangle$
simple harmonic motion	$a = -\omega^2 x$
velocity of particle in s.h.m.	$v = v_0 \cos \omega t$ $v = \pm\omega\sqrt{(x_0^2 - x^2)}$
Doppler effect	$f_o = \frac{f_s v}{v \pm v_s}$
electric potential	$V = \frac{Q}{4\pi\varepsilon_0 r}$
capacitors in series	$1/C = 1/C_1 + 1/C_2 + \ldots$
capacitors in parallel	$C = C_1 + C_2 + \ldots$
energy of charged capacitor	$W = \frac{1}{2}QV$
electric current	$I = Anvq$
resistors in series	$R = R_1 + R_2 + \ldots$
resistors in parallel	$1/R = 1/R_1 + 1/R_2 + \ldots$
Hall voltage	$V_H = \frac{BI}{ntq}$
alternating current/voltage	$x = x_0 \sin \omega t$
radioactive decay	$x = x_0 \exp(-\lambda t)$
decay constant	$\lambda = \frac{0.693}{t_{\frac{1}{2}}}$

© UCLES 2020

1 What is a reasonable estimate of the volume of a fully inflated standard football?

A $600\,cm^3$ **B** $6000\,cm^3$ **C** $60\,000\,cm^3$ **D** $600\,000\,cm^3$

2 What is **not** an SI base unit?

A coulomb

B kelvin

C kilogram

D second

3 Which two quantities are both vector quantities?

A displacement and distance

B force and momentum

C torque and time

D weight and pressure

4 A calibration curve is shown for an ammeter whose scale is inaccurate.

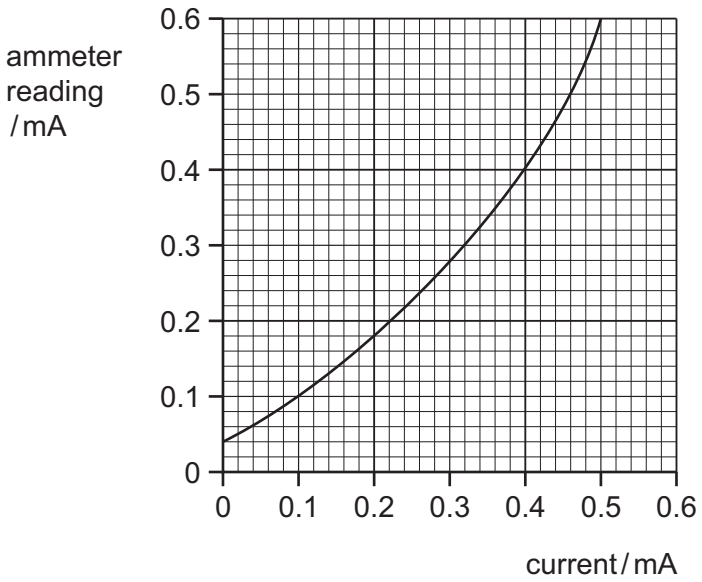

Two readings taken on the meter at different times during an experiment are 0.13 mA and 0.47 mA.

By how much did the current really increase between taking the two readings?

A 0.30 mA **B** 0.34 mA **C** 0.40 mA **D** 0.44 mA

© UCLES 2020

5 A student measures the length l and the period T of oscillation of a simple pendulum. He then uses the equation shown to calculate the acceleration of free fall g.

$$T = 2\pi\sqrt{\frac{l}{g}}$$

His measurements are shown.

l	$(87.3 \pm 0.2)\,\text{cm}$
T	$(1.9 \pm 0.05)\,\text{s}$

What is the percentage uncertainty in his calculated value of g?

A 2.4% **B** 2.9% **C** 5.5% **D** 7.2%

6 An object moves in a straight line. The graph shows the variation with time t of the velocity v of the object.

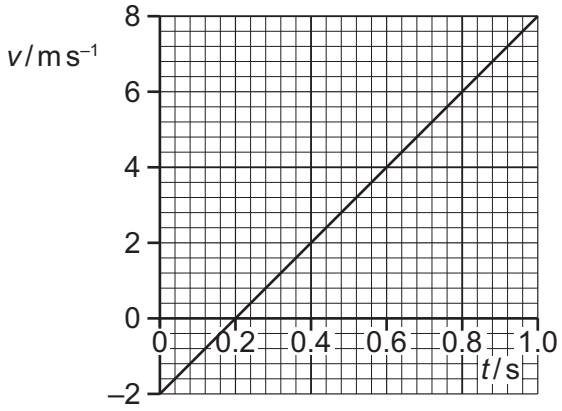

At time $t = 0$ the object is at point X.

What is the displacement of the object from point X at time $t = 0.80\,\text{s}$?

A 1.6 m **B** 1.8 m **C** 2.0 m **D** 3.2 m

7 An object accelerates uniformly from rest to speed v. It then moves at constant speed v for a time of 8.0 s before decelerating uniformly to rest. The total time taken is 12.0 s, and the total distance travelled is 60 m.

What is the speed v?

A $3.0\,\text{m s}^{-1}$ **B** $5.0\,\text{m s}^{-1}$ **C** $6.0\,\text{m s}^{-1}$ **D** $15\,\text{m s}^{-1}$

© UCLES 2020

8 A device for spraying paint consists of a box with its axes horizontal and vertical. One of its vertical faces contains small holes. Paint is fed into the box under pressure via a vertical tube and exits through the holes as fine streams moving horizontally.

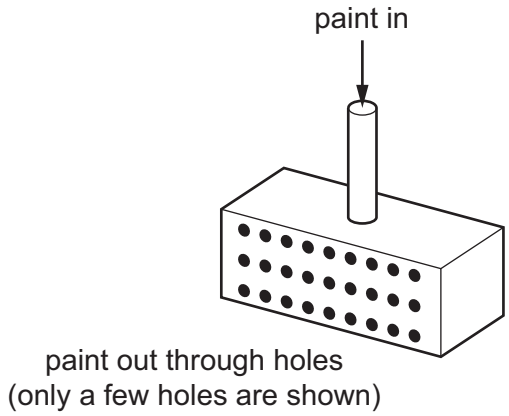

The paint is ejected at a speed of $2.5\,\text{m}\,\text{s}^{-1}$ through 400 holes, each of area $0.4\,\text{mm}^2$. The density of the paint is $900\,\text{kg}\,\text{m}^{-3}$.

What is the horizontal force required to hold the device stationary as it ejects the paint?

A 0.36 N **B** 0.90 N **C** 2.3 N **D** 900 N

9 A party balloon is filled with air and held stationary at a height of several metres above the ground. The balloon is then dropped in still air.

Which statement describes the motion of the balloon from the moment of release until just before it hits the floor?

A The balloon decelerates continuously.

B The balloon falls at a constant speed and then decelerates.

C The balloon falls at a constant speed.

D The balloon initially accelerates and then reaches a constant speed.

10 An object of mass m travelling with speed $5u$ collides with, and sticks to, an object of mass $5m$ travelling in the same direction with speed u.

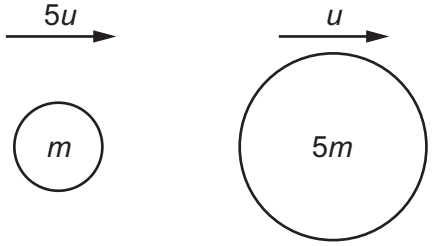

What is the speed with which the two objects travel together in the original direction?

A $\frac{3}{10}u$ **B** u **C** $\frac{6}{5}u$ **D** $\frac{10}{6}u$

© UCLES 2020

11 An air bubble is rising through a liquid at a constant speed. The forces on it are the upthrust *U*, the viscous drag *V* and its weight *W*.

Which diagram shows the directions and relative sizes of the forces?

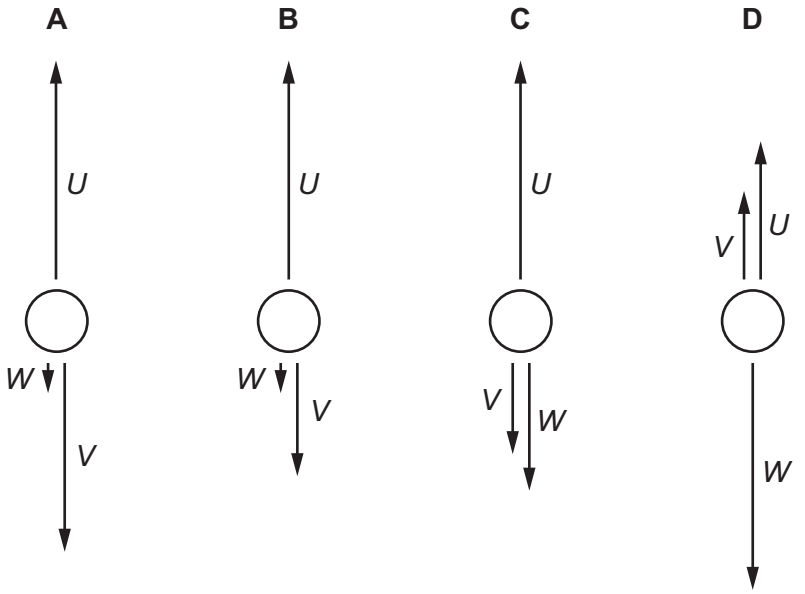

12 A couple applies a clockwise torque of 9.0 N m to a circular disc.

Which diagram shows this couple?

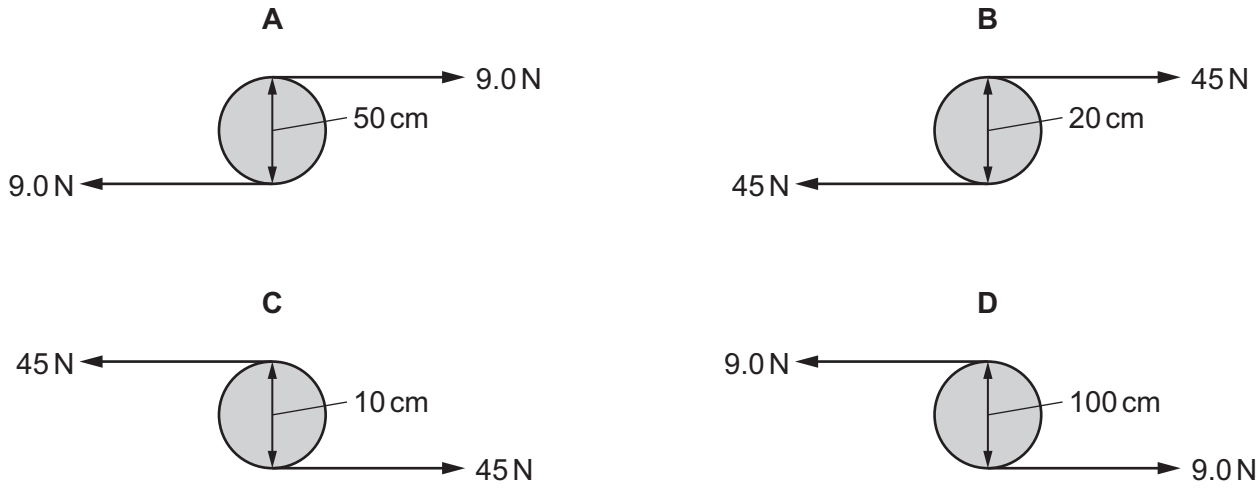

13 A shelf PQ is attached to a vertical wall at P and supports a book.

The shelf is held horizontal by a rigid bar XY, as shown.

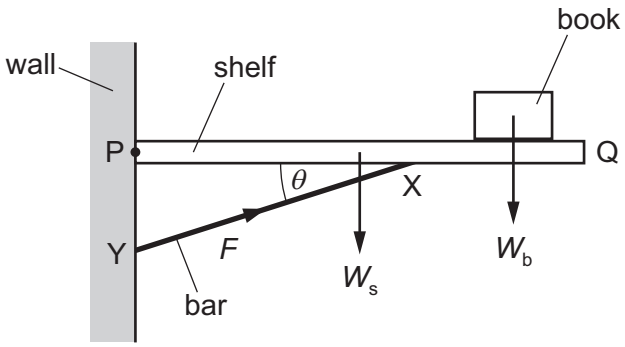

The weight of the shelf is W_s and the weight of the book is W_b.

The bar is at an angle θ to the shelf and exerts a force F on the shelf.

The shelf is in equilibrium.

What are the magnitudes of the horizontal and the vertical components of the force of the wall on the shelf at P?

	horizontal component	vertical component
A	$F \cos \theta$	$(W_s + W_b - F \cos \theta)$
B	$F \cos \theta$	$(W_s + W_b - F \sin \theta)$
C	$F \sin \theta$	$(W_s + W_b - F \cos \theta)$
D	$F \sin \theta$	$(W_s + W_b - F \sin \theta)$

© UCLES 2020

14 A glider is descending at constant speed at an angle of 15° to the horizontal. The diagram shows the directions of the lift *L*, air resistance *R* and weight *W* acting on the glider.

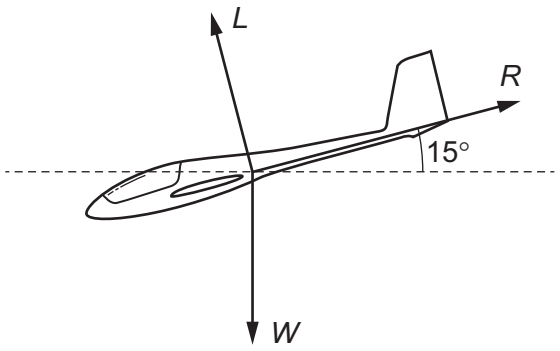

Which vector triangle could represent the forces acting on the glider?

A

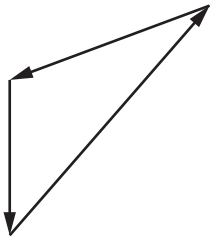

B



C



D



15 A solid cylinder of density ρ_C, cross-sectional area *A* and length *X* is submerged in a liquid of density ρ_L. The upper face of the cylinder is at a depth *H* below the surface of the liquid, as shown.

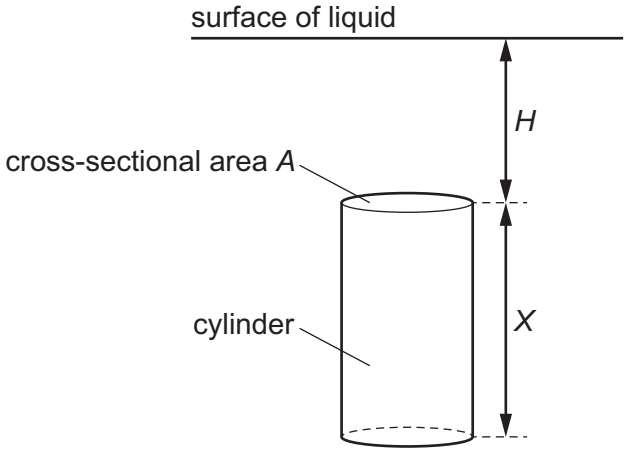

The acceleration of free fall is *g*.

Which expression gives the magnitude of the upthrust force acting on the cylinder?

A $\rho_C AHg$ **B** $\rho_C AXg$ **C** $\rho_L AHg$ **D** $\rho_L AXg$

16 A ball drops onto a horizontal surface and bounces elastically.

What happens to the kinetic energy of the ball during the very short time that it is in contact with the surface?

A Most of the kinetic energy is lost as heat and sound.

B The kinetic energy decreases to zero and then returns to its original value.

C The kinetic energy remains constant because it is an elastic collision.

D The kinetic energy remains constant in magnitude but changes direction.

17 Some gas in a cylinder is supplied with thermal energy q.

The gas does useful work in expanding at constant pressure p from volume V_0 to volume V_F, as shown.

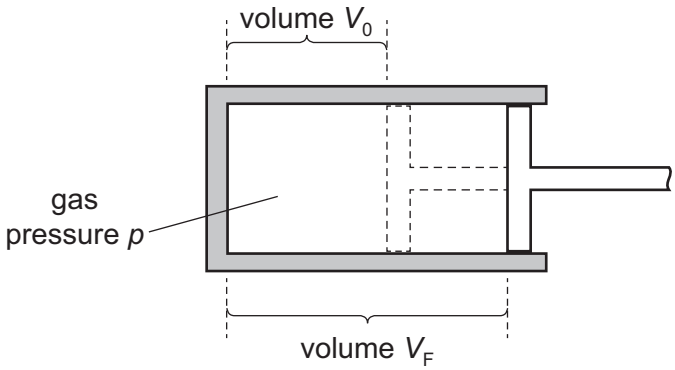

Which expression gives the efficiency of this process?

A $\frac{pV_0}{q}$ **B** $\frac{V_F}{V_0 q}$ **C** $\frac{p(V_F - V_0)}{q}$ **D** $\frac{(V_F - V_0)}{V_0 q}$

18 An object of mass 0.30 kg is thrown vertically upwards from the ground with an initial velocity of $8.0\,m\,s^{-1}$. The object reaches a maximum height of 1.9 m.

How much work is done against air resistance as the object rises to its maximum height?

A 4.0 J **B** 5.6 J **C** 9.6 J **D** 15 J

19 A water pump raises a mass of 27×10^3 kg of water through a vertical distance of 80 m in a time of 1.0 hour.

What is the average useful output power of the pump?

A 0.60 kW **B** 5.9 kW **C** 36 kW **D** 350 kW

© UCLES 2020

20 A platform is suspended by four steel wires. Each wire is 5.0 m long and has a diameter of 3.0 mm. The Young modulus of steel is 2.1×10^{11} Pa.

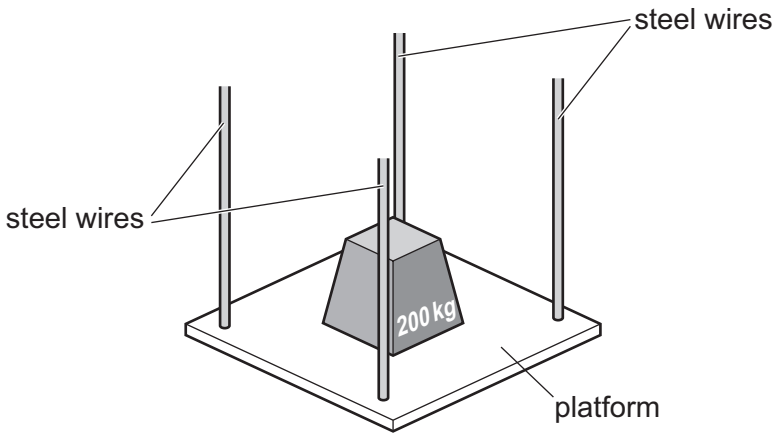

The wires obey Hooke's law when a load of mass 200 kg is placed on the platform.

How far will the platform descend because of the extension of the wires?

A 1.7×10^{-4} m **B** 4.1×10^{-4} m **C** 1.7×10^{-3} m **D** 6.6×10^{-3} m

21 A tensile force of 7.00 MN is applied to a sample of steel. This causes the sample to extend by 5.00 mm in the direction of the force. The sample obeys Hooke's law.

What is the work done to extend the sample?

A 17.5 J **B** 35.0 J **C** 17.5 kJ **D** 35.0 kJ

22 Two waves X and Y have the same frequency. The amplitude of X is $1.5A_0$ and the amplitude of Y is $2.5A_0$. The waves meet at a point and superpose to form a resultant wave.

For the resultant wave, what is the ratio $\frac{\text{maximum possible intensity}}{\text{minimum possible intensity}}$?

A 1.7 **B** 2.8 **C** 4.0 **D** 16

23 The displacement–time graph for an air particle in the path of a sound wave is shown.

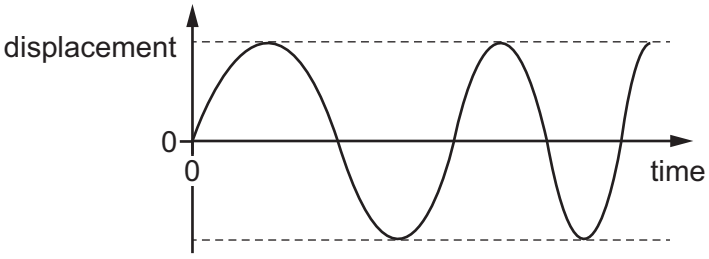

Which property of the sound wave must be increasing?

A amplitude

B frequency

C period

D speed

24 A sound wave is displayed on the screen of a cathode-ray oscilloscope (CRO) as shown.

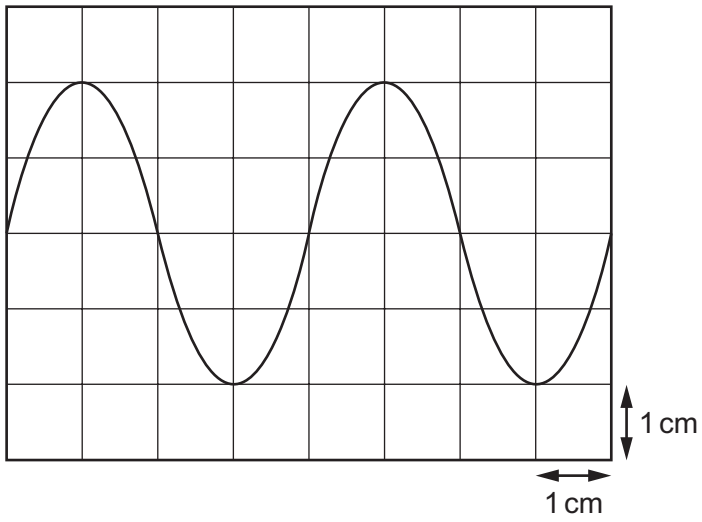

The time-base of the CRO is set at 2.5 ms cm^{-1}.

What is the frequency of the sound wave?

A 50 Hz **B** 100 Hz **C** 200 Hz **D** 400 Hz

25 The horn of a train emits sound of frequency f_1. While the horn is sounding, the train moves directly towards a stationary person. The speed of the train is 0.20v, where v is the speed of sound.

The frequency of the sound heard by the person is f_2.

What is the ratio $\frac{f_1}{f_2}$?

A $\frac{0.80}{1}$ **B** $\frac{1}{1.2}$ **C** $\frac{1.2}{1}$ **D** $\frac{1}{0.80}$

© UCLES 2020

26 Two satellites in orbit around the Earth are at a constant distance of 100 km apart from each other.

Satellite X transmits a microwave pulse towards satellite Y. The pulse takes time T to reach Y.

Satellite Y then transmits a pulse of visible light towards satellite X.

What is the time taken for the pulse of light to reach X?

A $10^{-5}\,T$ **B** $10^{-3}\,T$ **C** $10^{-2}\,T$ **D** T

27 A stationary wave is formed on a stretched string. The diagram illustrates the string at an instant of time when the displacement of the string is at its maximum.

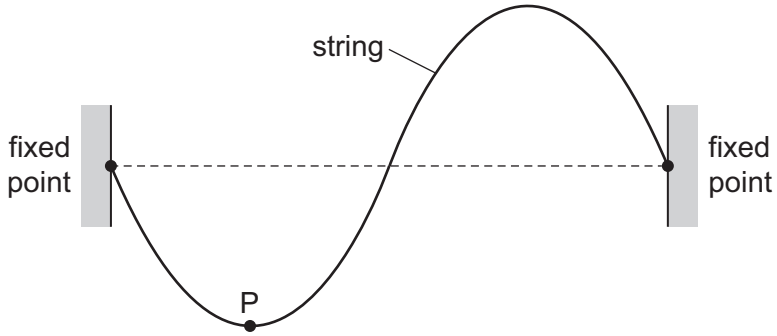

The frequency of the wave is 250 Hz. Point P on the string has a vertical displacement of –1.0 mm.

What will be the vertical displacement of the point P after a time of 5.0 ms?

A –1.0 mm **B** zero **C** +0.5 mm **D** +1.0 mm

28 What is meant by *diffraction*?

A the change in observed frequency when a wave source moves relative to an observer

B the formation of nodes and antinodes by two progressive waves travelling in opposite directions

C the spreading of a wave around the edge of an obstacle

D the superposition of two waves when they meet

29 In a dark room, a small source of red light illuminates two slits that are 0.75 mm apart. A few metres beyond the slits, the light falls on a screen producing a series of equally spaced bright lines.

Which change would cause the distance between the bright lines on the screen to be reduced?

A Change the source for one emitting blue light.

B Reduce the distance between the light source and the slits.

C Reduce the distance between the slits to 0.55 mm.

D Reduce the intensity of the light source.

© UCLES 2020

30 Light of wavelength 5.30×10^{-7} m is incident normally on a diffraction grating. The first-order maximum is observed at an angle of 15.4° to the direction of the incident light.

What is the angle between the first-order and second-order diffraction maxima?

A 7.7° **B** 15.4° **C** 16.7° **D** 32.1°

31 A stationary particle is in an electric field.

The only force on the particle is that from the electric field.

In which case is the electric field strength 5.0×10^{5} V m^{-1}?

A a force of 1.6×10^{-14} N acting on an electron

B a force of 3.2×10^{-14} N acting on an alpha-particle

C a force of 8.0×10^{-14} N acting on an alpha-particle

D a force of 8.0×10^{-14} N acting on a proton

32 A constant potential difference is applied between two horizontal metal plates. A charged oil droplet is held stationary by the electric field between the plates.

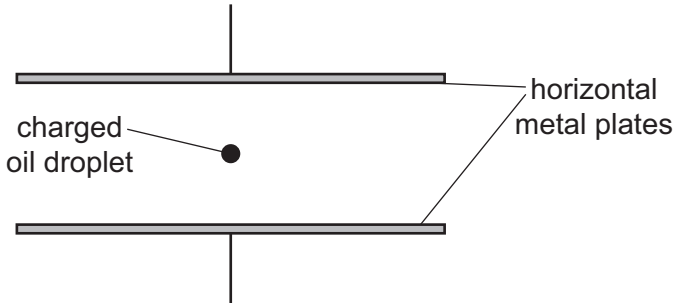

As some of the oil evaporates, the droplet loses mass and starts to accelerate. Its charge remains constant.

In which direction does the droplet accelerate, and which change needs to be made to the separation of the plates in order to stop this acceleration?

	direction of acceleration	separation of the plates
A	downwards	decrease
B	downwards	increase
C	upwards	decrease
D	upwards	increase

© UCLES 2020

33 Two resistors R_1 and R_2 are made from wire of the same material.

They are connected in parallel to each other in a circuit, as shown.

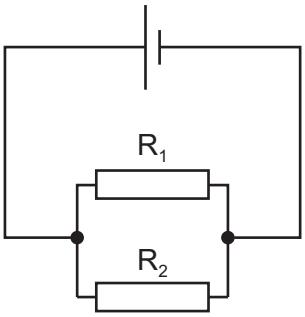

The diameter of R_2 is half the diameter of R_1.

The resistance of R_2 is three times the resistance of R_1.

What is the value of the ratio $\frac{\text{average drift speed of free electrons in } R_1}{\text{average drift speed of free electrons in } R_2}$?

A $\frac{3}{2}$ **B** $\frac{3}{4}$ **C** $\frac{1}{6}$ **D** $\frac{1}{12}$

34 A student describes potential difference as the energy transferred per unit charge.

Which statement about the energy transfer is correct?

A It is from electrical energy into other forms.

B It is from other forms into electrical energy.

C It only takes place inside a power supply.

D It only takes place inside resistors.

35 A metal cube has a resistance of 4.0 Ω between opposite faces.

Ten of these cubes are put together to make a cuboid of 1 × 2 × 5 cubes.

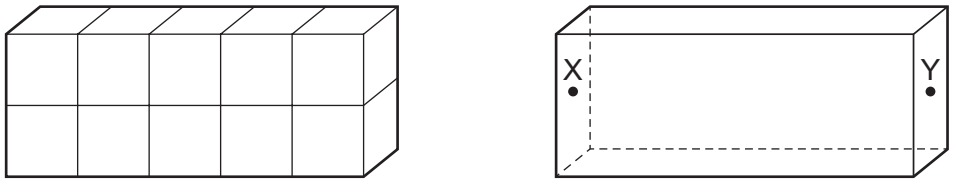

There is no extra resistance where the faces of the cubes touch each other.

What is the resistance of the cuboid when connected between faces X and Y?

A 1.6 Ω **B** 2.0 Ω **C** 10 Ω **D** 40 Ω

36 A cell is connected to a fixed resistor. Over a long period of time, the internal resistance of the cell increases.

What is the effect of the increase in internal resistance on the electromotive force (e.m.f.) of the cell and on the power dissipated by the fixed resistor?

	e.m.f.	power dissipated
A	decreases	decreases
B	decreases	no change
C	no change	decreases
D	no change	no change

37 Four identical resistors are connected in a circuit, as shown.

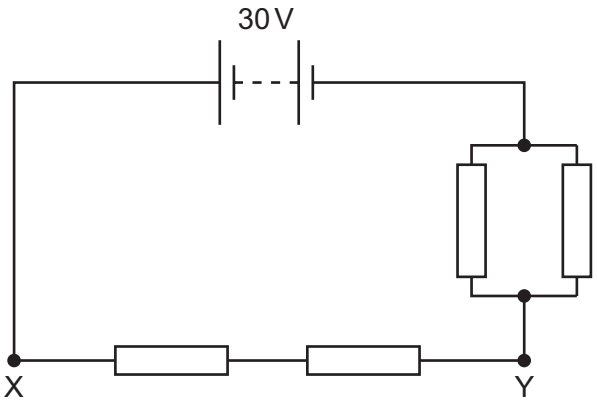

The battery has negligible internal resistance and an e.m.f. of 30 V.

What is the potential difference between the two points X and Y?

A 6.0 V **B** 15 V **C** 20 V **D** 24 V

© UCLES 2020

38 A power supply and a solar cell are compared using the potentiometer circuit shown.

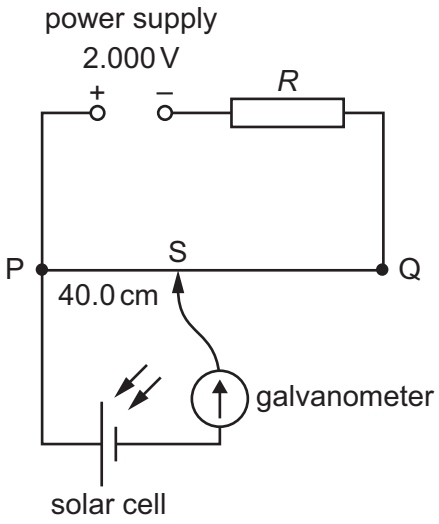

The potentiometer wire PQ is 100.0 cm long and has a resistance of 5.00 Ω. The power supply has an e.m.f. of 2.000 V and the solar cell has an e.m.f. of 5.00 mV.

Which resistance *R* must be used so that the galvanometer reads zero when PS = 40.0 cm?

A 395 Ω **B** 405 Ω **C** 795 Ω **D** 805 Ω

39 The table contains data for four different nuclei P, Q, R and S.

nucleus	number of neutrons	nucleon number
P	5	10
Q	6	10
R	6	14
S	8	16

Which two nuclei are isotopes of the same element?

A P and Q **B** P and S **C** Q and R **D** R and S

40 Which particle is a fundamental particle?

A alpha-particle

B electron

C neutron

D proton

© UCLES 2020

BLANK PAGE

BLANK PAGE

BLANK PAGE

Permission to reproduce items where third-party owned material protected by copyright is included has been sought and cleared where possible. Every reasonable effort has been made by the publisher (UCLES) to trace copyright holders, but if any items requiring clearance have unwittingly been included, the publisher will be pleased to make amends at the earliest possible opportunity.

To avoid the issue of disclosure of answer-related information to candidates, all copyright acknowledgements are reproduced online in the Cambridge Assessment International Education Copyright Acknowledgements Booklet. This is produced for each series of examinations and is freely available to download at www.cambridgeinternational.org after the live examination series.

Cambridge Assessment International Education is part of the Cambridge Assessment Group. Cambridge Assessment is the brand name of the University of Cambridge Local Examinations Syndicate (UCLES), which itself is a department of the University of Cambridge.

© UCLES 2020